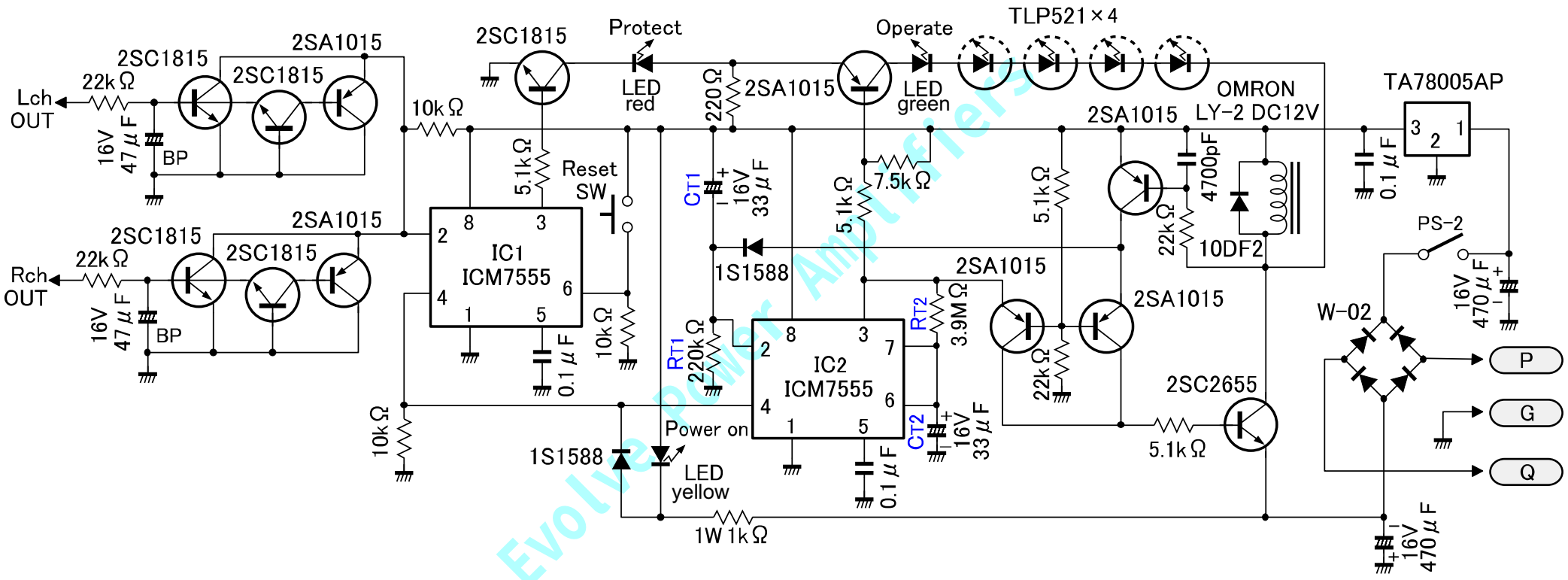

Evolve Power Amplifiers