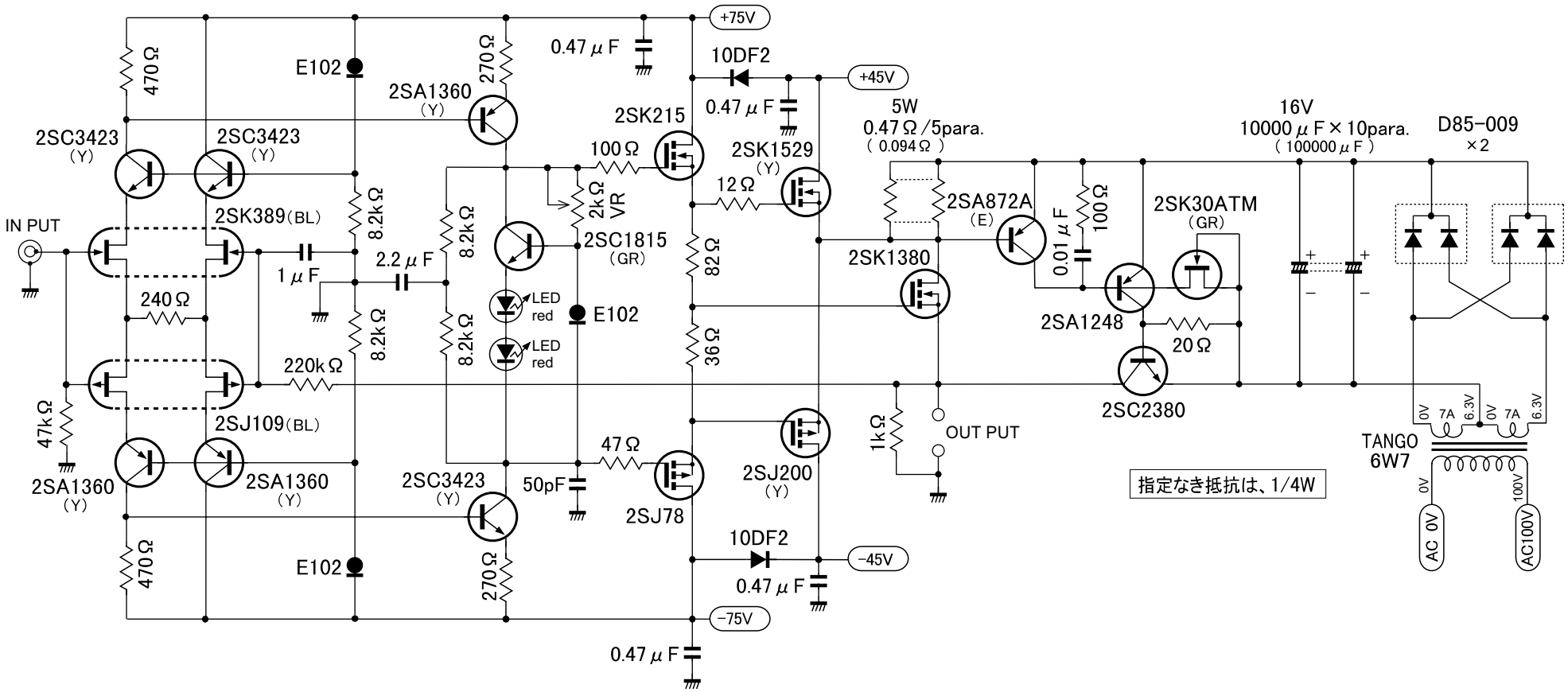
+75V
+45V
-45V
-75V
IN PUT
OUT PUT
470Ω
2SC3423
(Y)
2SC3423
(Y)
E102
2SA1360
(Y)
270Ω
0.47μF
10DF2
0.47μF
2SK215
100Ω
2SK1529
(Y)
12Ω
5W
0.47Ω/5para.
(0.094Ω)
16V
10000μF×10para.
(100000μF)
D85-009
×2
2SK389(BL)
8.2kΩ
2.2μF
1μF
240Ω
220kΩ
47kΩ
2SJ109(BL)
2SA1360
(Y)
2SA1360
(Y)
2SC3423
(Y)
2k Ω
VR
2SC1815
(GR)
LED
red
LED
red
E102
82Ω
36Ω
47Ω
50pF
2SJ78
2SJ200
(Y)
2SK1380
2SA872A
(E)
0.01μF
100Ω
2SK30ATM
(GR)
2SA1248
20Ω
2SC2380
1kΩ
指定なき抵抗は、1/4W
TANGO
6W7
0V
7A
6.3V
0V
7A
6.3V
0V
100V
AC 0V
AC100V