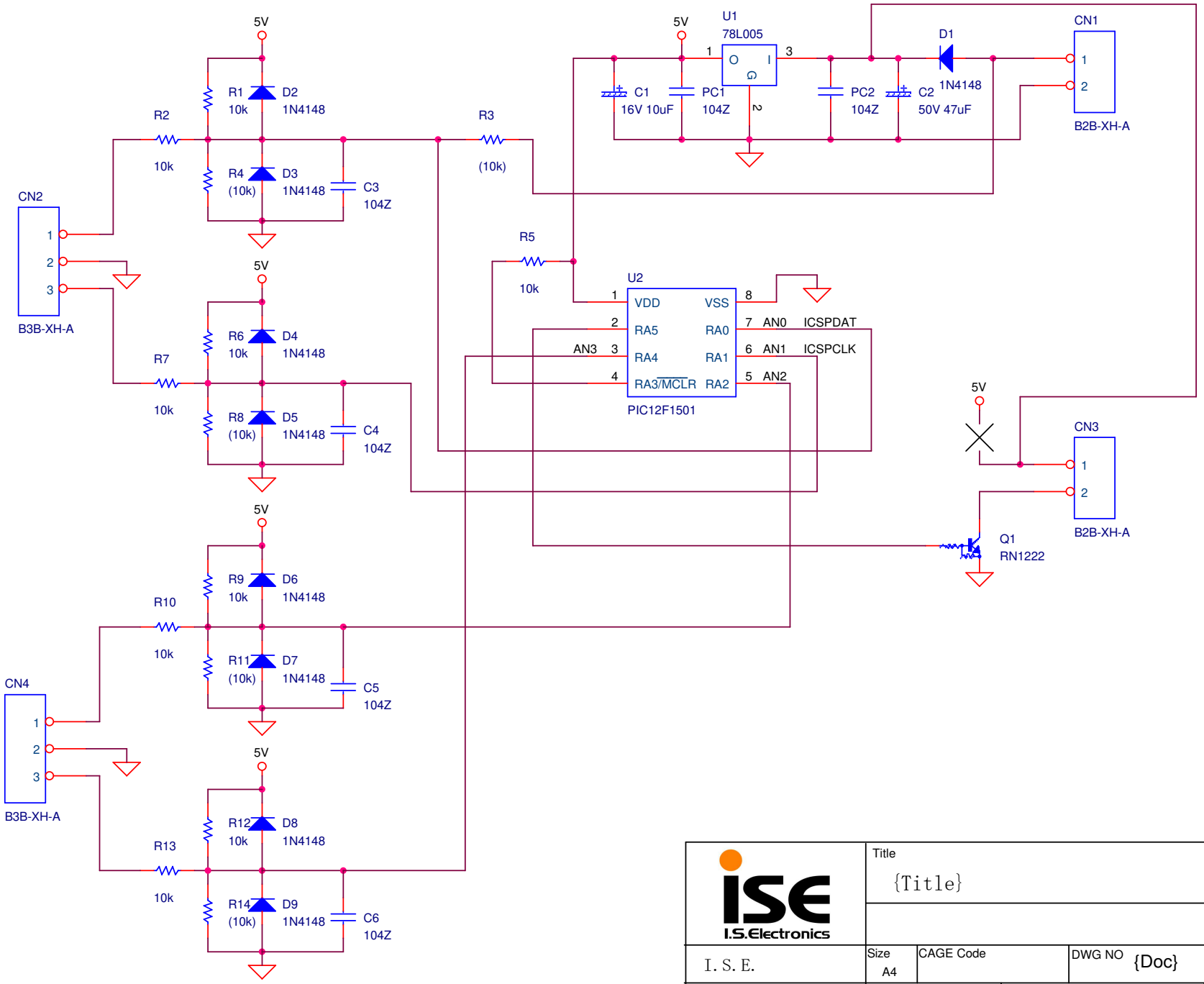

I.S.Electronics	Title {Title}			
I. S. E.	Size A4	CAGE Code	DWG NO {Doc}	Rev {RevCode}
Sunday, February 22, 2026	Scale	Drowing Saburo Iwano	Sheet 1 of 1	